Varnasan
CONTROL VALVE TECHNOLOGIES

WAFER TYPE BALL VALVE
Stainless Steel, Flanged

		PN16
Stainless Steel	AISI 304	V-IMW-04-04F
	AISI 316	V-IMW-05-04F

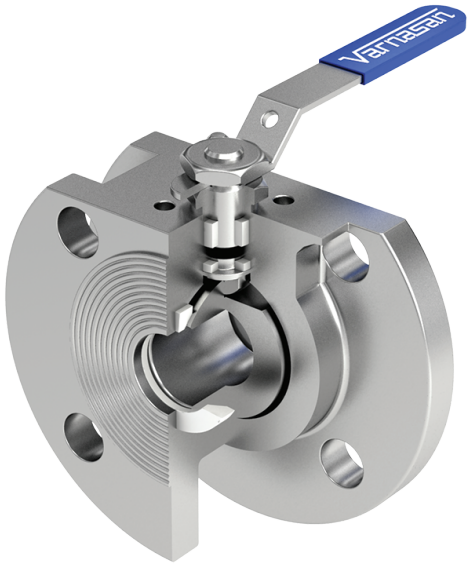

Design

Connection : EN 1092
Actuator Connection: ISO 5211

Technical Features

Working Pressure : DN15-DN50 PN40
DN65-DN100 PN16
Working Tempeture : -20°C / +120°C

Application

Water, oil, air and corrosive liquid fluids

Kompoenent List

NO	PART NAME	MALZEME
1	NUT	AISI 304
2	LEVER	201 + PVC
3	PUL	AISI 304
4	KİLİT SACI	AISI 304
5	BAWL WASHER	AISI 304
6	COMPRESSION RING	AISI 304
7	SEAL	PTFE
8	SEAL	PTFE
9	BALL SHAFT	AISI 304 / 316
10	COVER	AISI 304 / 316
11	BALL	AISI 304 / 316
12	BALL GASKET	PTFE
13	COVER GASKET	PTFE
14	BODY	AISI 304 / 316

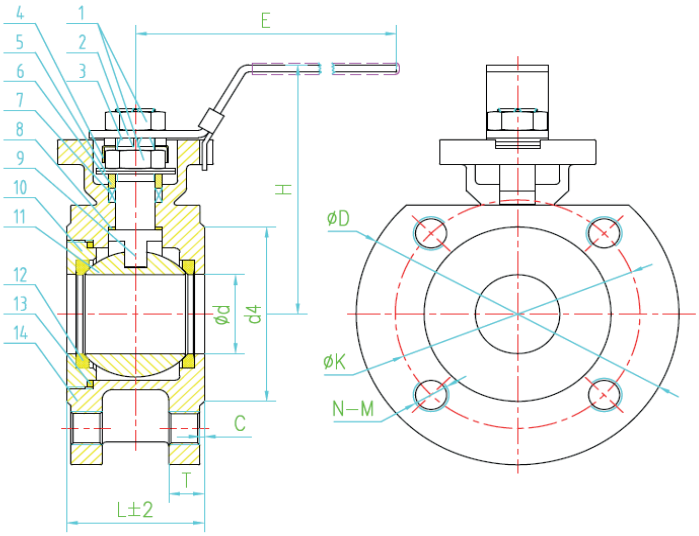

ITEM / SIZE	1/2"	3/4"	1"	11/4"	11/2"	2"	21/2"	3"	4"
d	15	20	25	32	36	46	57	73	90
d4	48	58	68	78	88	10	122	138	158
K	65	75	85	100	110	125	145	160	180
D	95	105	115	140	150	165	185	200	220
C	2	2	2	2	3	3	3	3	3
T	14	16	16	16	16	18	18	20	20
N-M	4-M12	4-M12	4-M12	4-M16	4-M16	4-M16	4-M16	8-M16	8-M16
H	70	75	95	100	120	125	140	155	165
E	125	125	155	155	185	185	260	260	300
L	42	44	50	60	65	80	110	120	150
ISO5211	F03	F03	F04	F04	F05	F05	F07	F07	F07
	F04	F04	F05	F05	F07	F07	F10	F10	F10
S	9	9	11	11	14	14	17	17	17
N.M	8	12	15	18	28	42	51	86	121

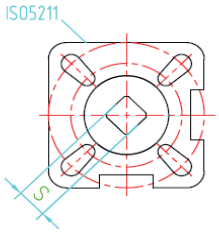

Varnasan
CONTROL VALVE TECHNOLOGIES

WAFER TYPE BALL VALVE
Stainless Steel, Flanged

PN16
Stainless Steel AISI 304 V-IMW-04-04F
AISI 316 V-IMW-05-04F

SIZE	PN	Ød	L	ØC	ØB	ØD	H	H1	E	f	T	□G	ØR	Ør	ØK1	ØK2	N	A	ISO-5211
DN15	16	15	42	45	65	95	48.5	76	110	2	14	9	42	36	6	6	4	M12	F03-F04
DN20	16	20	44	58	75	105	53.5	81	110	2	16	9	42	36	6	6	4	M12	F03-F04
DN25	16	25	50	68	85	115	59	90	160	2	16	11	50	42	7	6	4	M12	F04-F05
DN32	16	30	60	78	100	140	71	102	160	2	16	11	50	42	7	6	4	M16	F04-F05
DN40	16	36	65	88	110	150	78	115	185	3	16	14	70	50	9	7	4	M16	F05-F07
DN50	16	46	80	102	125	165	85	122	185	3	18	14	70	50	9	7	4	M16	F05-F07
DN65	16	57	110	122	145	185	100	168	305	3	18	17	102	70	11	9	4	M16	F07-F010
DN80	16	73	120	138	160	200	110	178	305	3	20	17	102	70	11	9	8	M16	F07-F010
DN100	16	90	150	158	180	220	130	198	305	3	20	19	102	70	11	9	8	M16	F07-F010